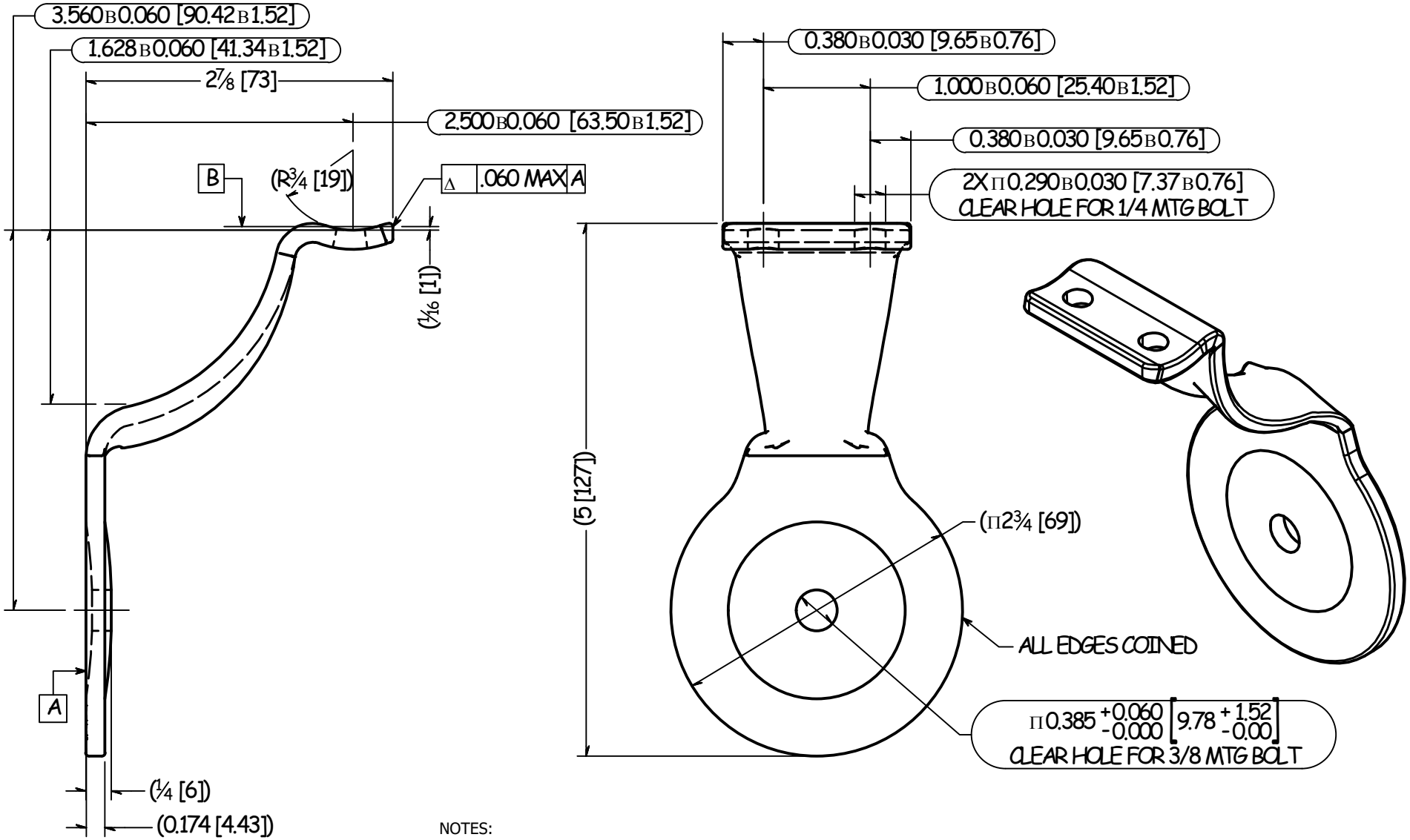

NOTES:
1. DIMENSIONS SHOWN AS INCHES [MILLIMETERS].
2. DIMENSIONS WITH (XXX) DENOTE AS REFERENCE.
3. ENCIRCLED DIMENSIONS DENOTE AS CRITICAL DIMENSIONS.
4. BURRS 0.015 MAX. [0.381]

TOLERANCE	CUT LENGTH:	FINISH:	DESCRIPTION:	
UNLESS OTHERWISE NOTED, TOLERANCES TO CONFORM TO ES.03.011		MILL	BRACKET ST STYLE B 2.50 1.50" DROP 1-HOLE	
	DEVELOPED LENGTH:	WEIGHT:	MATERIAL: C7100	MATERIAL DESC: 7 Ga. Steel Coil 8 X .1793
		0.55 lbmass	DATE:	REV: 3
	TOOL NUMBER: TL8011		DRAWN BY: R. Knepprath	
			PART NUMBER:	